TO-209AB (TO-93)
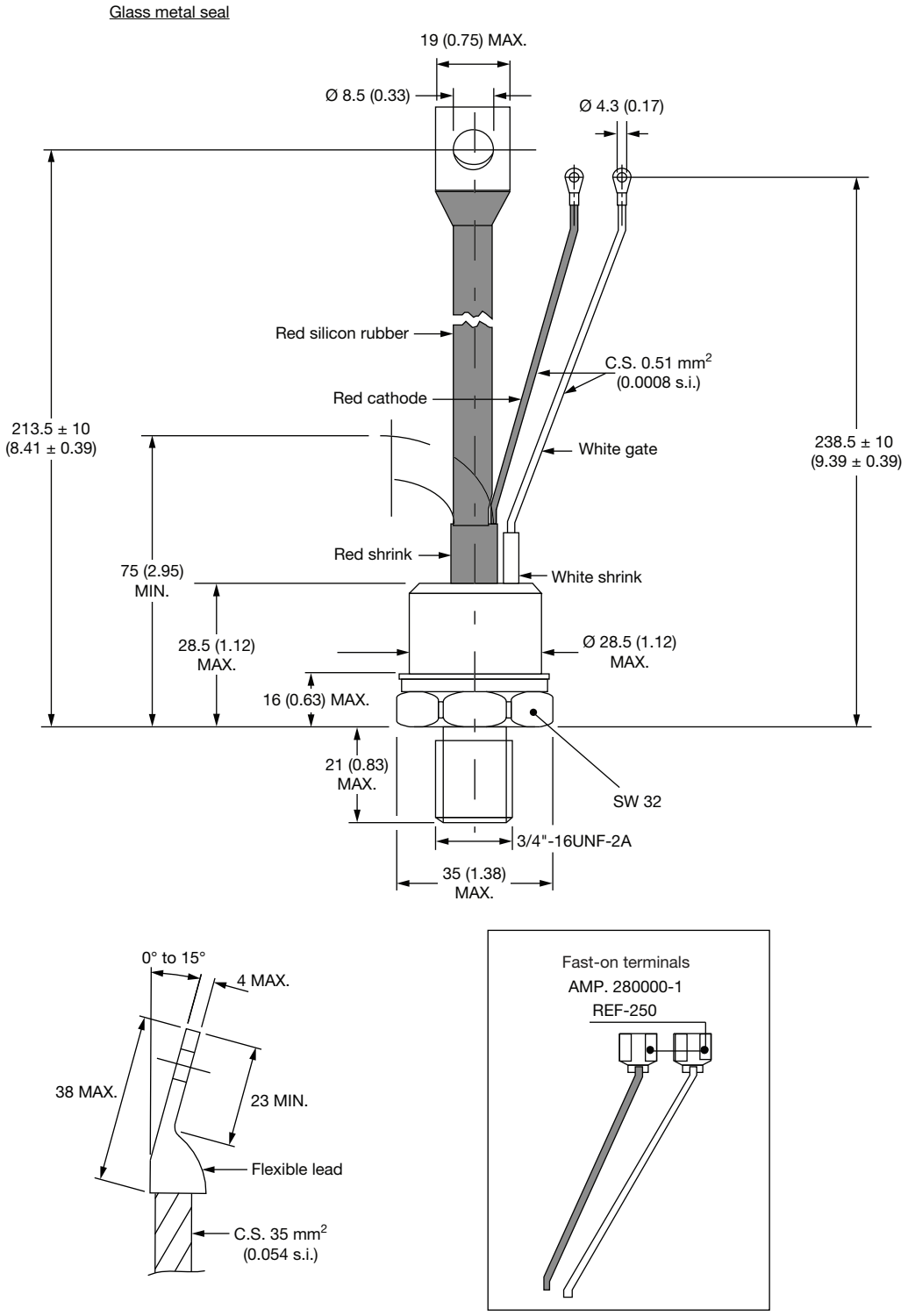
DIMENSIONS in millimeters (inches)